ANHANG

Low-intensity Single Aviation Obstruction Light

AH-LI/B

Advantages

1.PC material with good impact protection strength, thermal stability, high transmittance.
2.Bird spike against bird drop.
3.International-advanced cold LED with low power consumption, high brightness and service life of light source reaching 100000hours.
4.LED based on obstruction light last 15 times longer than traditional light source, incandescent light.
5.About 96% less power than 116W incandescent light.
6.Major Maintenance Cost Saving, Surge protection device inside light.
7.Strong corrosion resistance, Shock and Vibrations protection and UV protection.
8.Dawn to Dusk operating: Built-in photocell can let light work automatically at night, closed during the day.
9.3/4inch or 1inch installation size and small volume especially being suitable for telecom and flag-pole installation way.
10.There is one switch converting between Flashing mode and Steady-burning way.
11.Five Years Warranty Period.

Function

This product is single light with Photocell. It can work at night automatically when ambient brightness is lower than 500cd/m2.Volume of this light is very small, so it is especially suitable for flag-pole installation way. nd flag-pole installation way.

Scope of Application

This series of products can be used alone on the top of the High-rise Building, High Chimney, marking towers (Telecom, GSM, Microwave & TV)，High Pole, Tower Crane, Wind Turbine, etc whose height is lower than 45m.When obstacle object is higher than 45m, this series of products can be used with Medium-intensity or high-intensity obstruction light to potentially hazardous obstructions to air traffic with a steady or flashing red safety light.

Application

ANHANG TECHNOLOGY

Add: Floor 4, Building 1, Bangtai Industrial Zone, Jixiang Garden, Bantian Street, Longgang District, Shenzhen, Guangdong, China

Tel/Fax : +86-755-89589401
Mob : +86-13260726316 (Alice)
E-mail : sale@ahicao.com
http://www.ahicao.com
http://www.annhung.com

ISO 9001 UCS | IP65 | shockproof | Pb | CE

© Anhang Technology 2016 | All rights reserved

Low-intensity Single Aviation Obstruction Light
AH-LI/B

Main Parameter

1.Mode: AH-LI/B
2.Light intensity: ⩾32.5cd(Option 10cd,50cd,80cd,100cd)
3.Flash rate: Steady-burning mode or Flashing mode(20-60times/minute)
4.Light source: LED
5.Service life of LED: ⩾100,000hours
6.Operating voltage: AC220V (option voltage,eg.AC120V,AC110V,DC48V)
7.Power consumption: 3W
8.Overall size(mm):136 by 136 by 220
9.Installation size: 3/4inch or 1 inch
10.Vertical degree: ⩾10°
11.Horizontal degree: 360°
12.Material:
-Housing: PC
-Base: die casting aluminum
13.Weight: 1Kg
14.Emitting color: Aviation red
15.Ambient temperature: -40℃~+70℃
16.Wind load: 80m/s
17.Protectionstandard: IP65

Production Flow Chart

Compliance

- Low-intensity Type A or Type B FAA L-810
- Low Intensity Single Obstruction Light, ICAO Annex 14 Volume 1,'Aerodrome Design and Operations' Forth edition July 2004,table6.3

Dimension Drawing

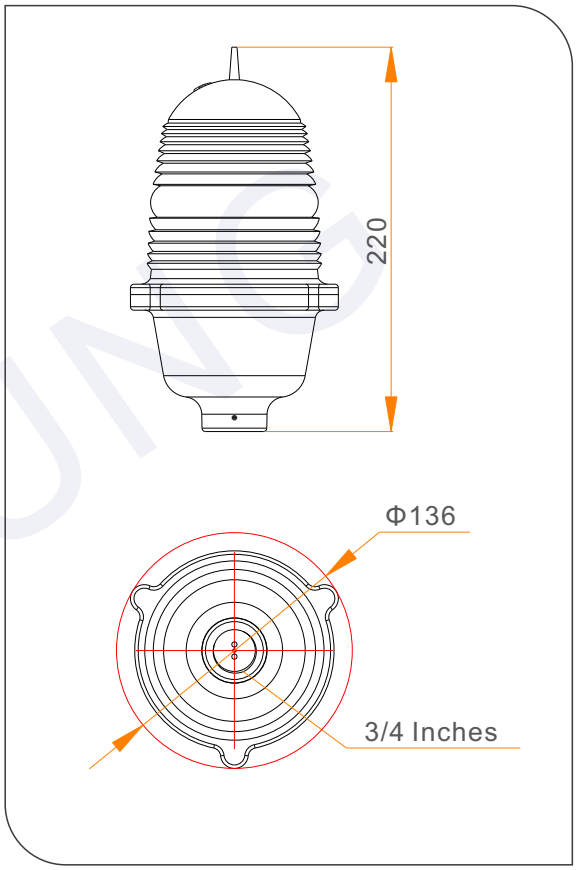

Installing diagram

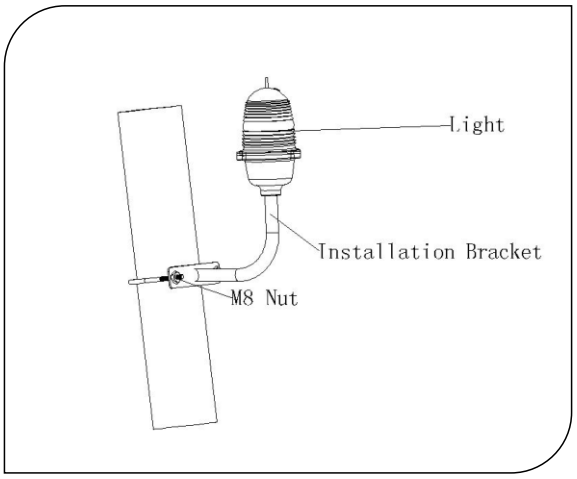

ANHANG TECHNOLOGY

Add: Floor 4, Building 1, Bangtai Industrial Zone, Jixiang Garden, Bantian Street, Longgang District, Shenzhen, Guangdong, China

Tel/Fax : +86-755-89589401
Mob : +86-13260726316 (Alice)
E-mail : sale@ahicao.com
http://www.ahicao.com
http://www.annhung.com

IP65 shockproof Pb

© Anhang Technology 2016 | All rights reserved